Clermont County Public Health

Prevent. Promote. Protect.

November 25, 2026

Re: Submitting Septic Rehab Bids

Dear Installer,

All itemized bids for Septic Rehab jobs must be returned to CCPH. Bids can be emailed to kstapleton@clermontcountyohio.gov, faxed to 513-732-7936, or mailed/dropped off to our office at 2275 Bauer Road, Batavia, OH 45103.

This job is funded by Ohio EPA's Water Pollution Control Loan Fund (WPCLF) and will require a performance bond if you are the low bidder. The cost of the bond is not an allowable cost according to OEPA guidance. **Please do not itemize the cost of the performance bond in your bid.**

After the work passes final inspection and the homeowner is satisfied with the work, you must submit a final invoice, a notarized contractor's affidavit, and a waiver of all liens. Payment requests will be processed as soon as they are received, and payment will be made in approximately one to two weeks.

If you have any questions about the grant job process or requirements, please call or email me.

Sincerely,

Katrina Stapleton

Katrina Stapleton
513-732-7601
kstapleton@clermontcountyohio.gov

Job description for septic replacement at: Rebecca Hitchin
6648 Epworth Road
Loveland, OH 45140

- Application ($600.00) and Permit to Install ($674.00) fees
- Septic electrical permit ($35.35) and inspection will be required
- A preconstruction conference is required at the site.
- Install new building sewer pipe with a cleanout at the exterior wall of the home that connects into an EPA-approved discharge system.
- Encase building sewer pipe with a 6-inch diameter pipe of SDR 35 that extends 5 feet beyond the edge of the driveway
- Install pressurized discharge pipe that discharges into a distribution box with riser to grade located behind the EPA-approved discharging system.
- Install anti-buoyancy drain from EPA-approved discharging system to daylight beyond yard area on the north side of property.
- Install 4-inch gravity piping from distribution box to swale on north side of property.
- Pump, crush, and fill existing septic tank.
- Grade, seed, and straw areas disturbed by construction
- Remove all construction debris and surplus material from the property and leave the property in a neat and broom-clean condition upon completion of work

Bids due December 28, 2026

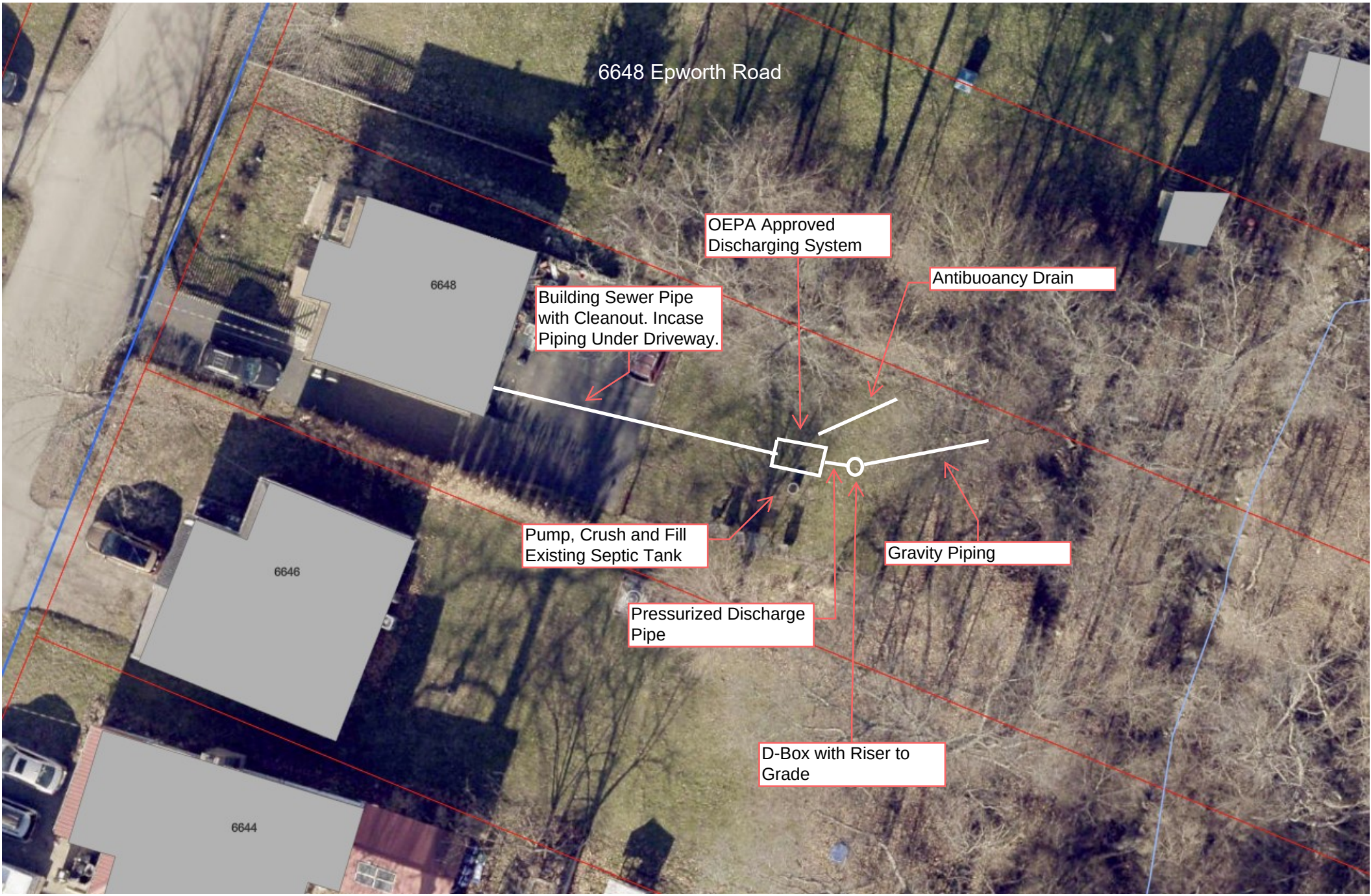
6648 Epworth Road
OEPA Approved Discharging System
Antibuoancy Drain
Building Sewer Pipe with Cleanout. Incase Piping Under Driveway.
Pump, Crush and Fill Existing Septic Tank
Gravity Piping
Pressurized Discharge Pipe
D-Box with Riser to Grade
6648
6646
6644

As Built drawing requirements:

- Legible and **signed by installer** with a statement "Installed in accordance with OAC 3701-29 Sewage Treatment Rules"

- Distances from system components having horizontal isolation distance requirements (Property lines, easements, driveways, ponds etc)

- A designated benchmark identified at the site

- Plan view of installed components including identification of specific products (e.g. brand name of tanks, pretreatment device), length of piping segments, grade shots to verify proper fall, elevations to document aggregate depth (e.g. existing grade at mound, top sand, top laterals, top gravel)

- List of materials to include make and model of tanks/pretreatment device, specifications and lengths of installed piping, aggregate types and tonnages, and compliance with system start up procedures.

- Other documentation as needed

Dose to D-Box to Discharge

Force main into D-box. Use grommet or manufacturer seal for pipe into d-box.

Pressure pipe comes in high to D-box.

Gravity outlet exists as low as possible to prevent water holding in D-box.

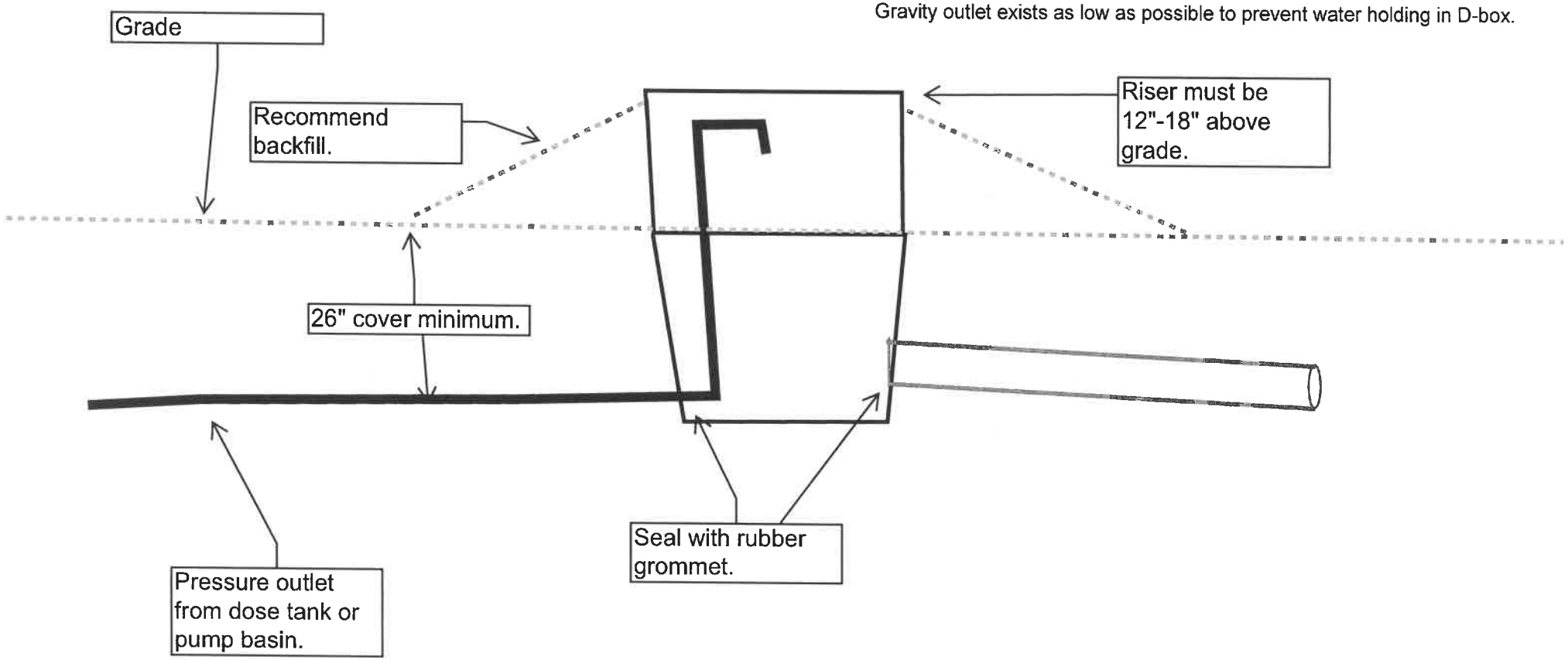

Pretreatment tank and Pump tank can be separated from treatment pod if site conditions require. Contact Hydro-Action or Hydro-Action distributer if tank separation is required.

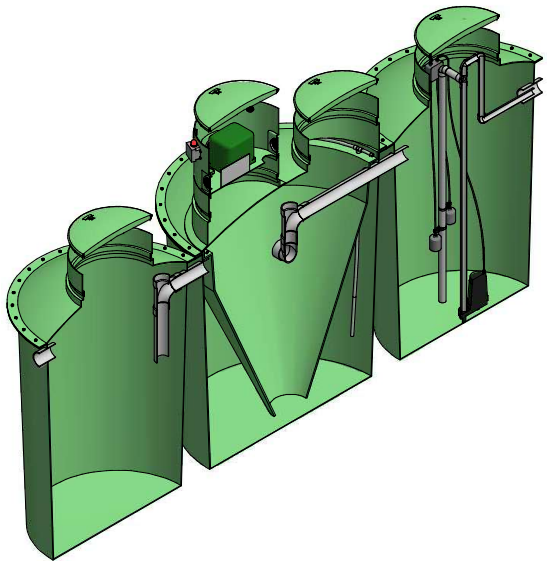

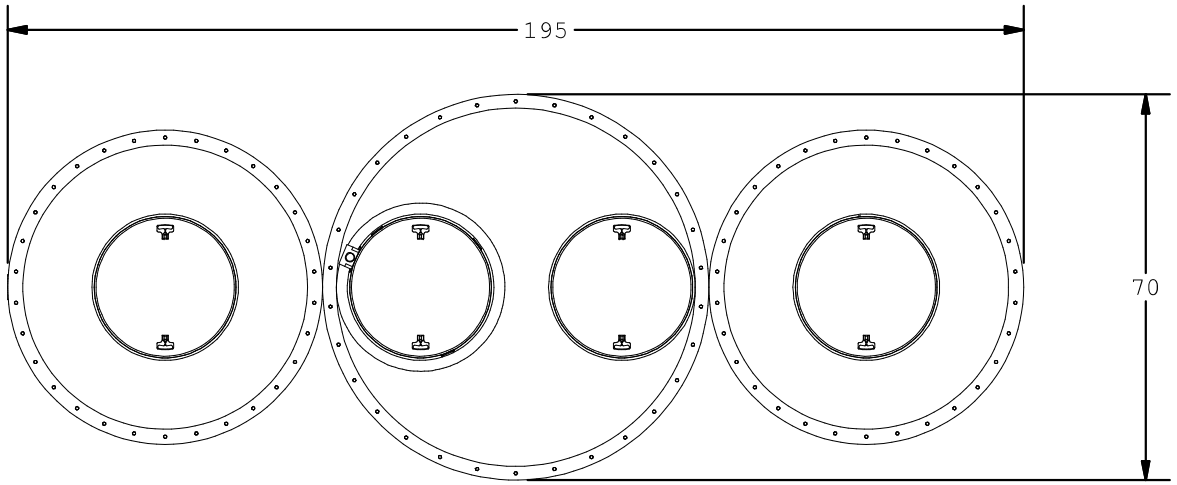

Pretreatment tank is not required, but PP-500 pretreatment tank is recommended for AP-500. Contact Hydro-Action or Hydro-Action distributer for larger pretreatment tank use cases.

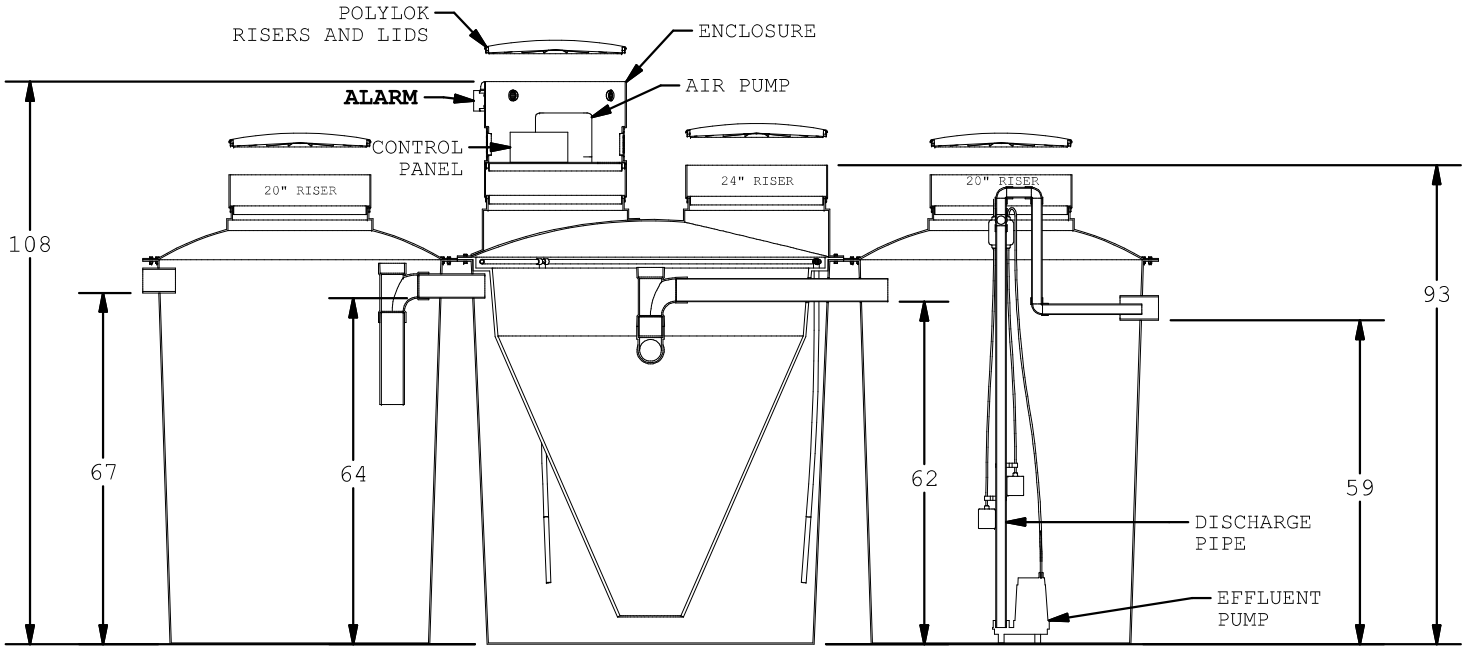

(Pre Tank Options: PP-500, PP-850, PP-1000, PP-1200, PP-1600)

(Pump Tank Options: PP-300, PP-500, PP-850, PP-1000, PP-1200, PP-1600)

hydro action® green from the ground up

WASTEWATER SOLUTIONS

PART DESCRIPTION: AP SERIES	TOLERANCES UNLESS OTHERWISE SPECIFIED FRACTIONS ±1/2" ANGLES ±1°	REV #:1	SCALE: 1 / 35	DATE: 9/11/2017	DRAWN BY: Israel Debro	SHEET #: 1 OF 1
	DIMENSIONS ARE IN INCHES UNLESS OTHERWISE SPECIFIED			PART #: AP-500/5+5		